Manual Clamp

Front connection

HKU 63 A10

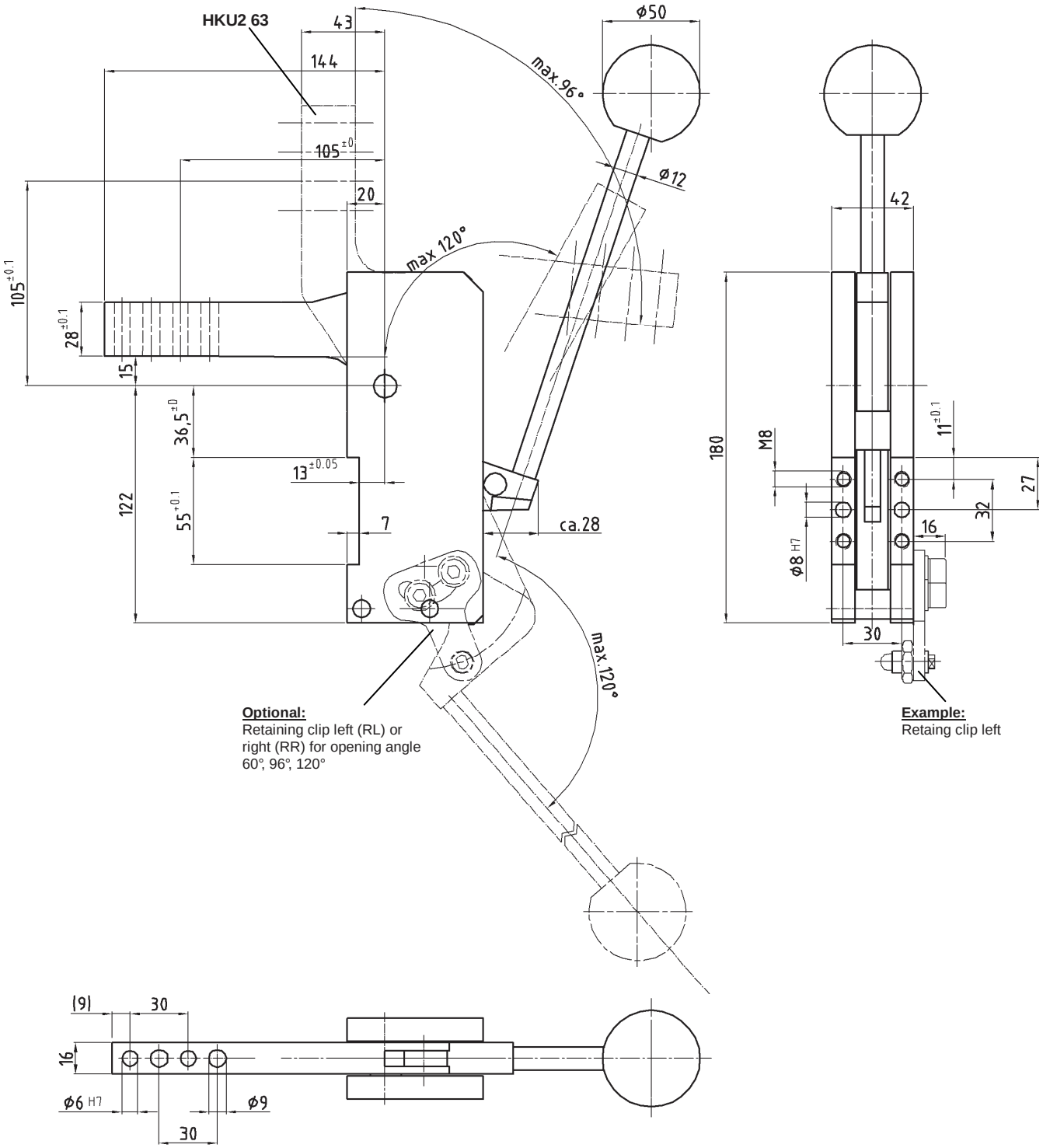

Ordering example Manual Clamp:

HKU 63 A10 RR 60°

HKU 63 A10: Type
RR: **Optional:** Retaining clip right (RL = left)
60°: Opening angle

Ordering example retaining clip as an accessory:

Order-No. 276913: Type R 63 HKU

Type	Clamping moment (Nm)	Holding torque max. (Nm)	Weight (kg)
HKU 63 A10	160	320	3,2
HKU2 63 A10	160	320	3,2

TÜNKERS®
Erfindergeist serienmäßig.
www.tuenkers.de ♦ Tel.: +49 2102 4517-0