TPM

TÜNKERS Pallet Mover

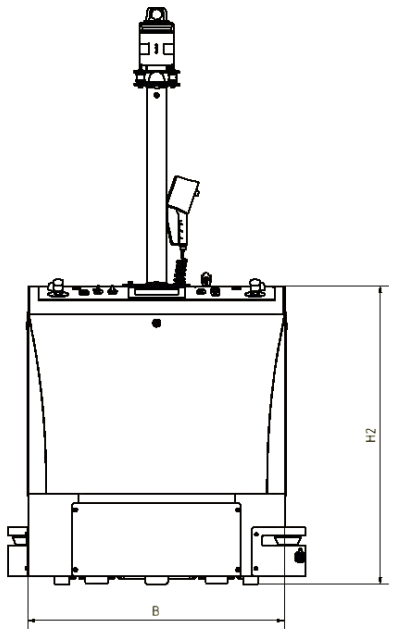

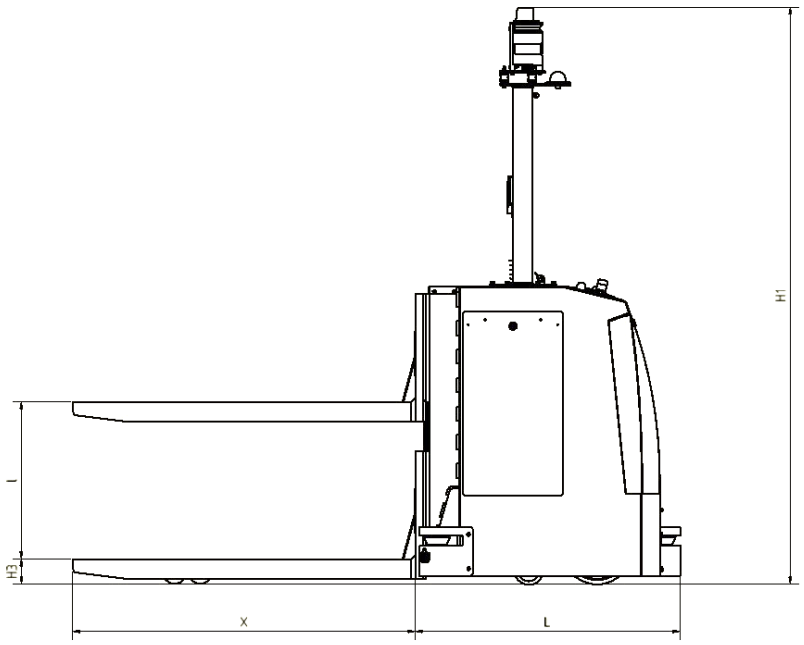

Ordering example:

TPM l500 Laser

TPM:	Type
l500:	Lift
Laser:	Navigation system

Ordering example Tünkers Navigations system:

Laser:	Using reflectors and laser-navigation sensor
Contour :	Using a laser scanner
UWB:	Using beacons and run-time measurement (in development)

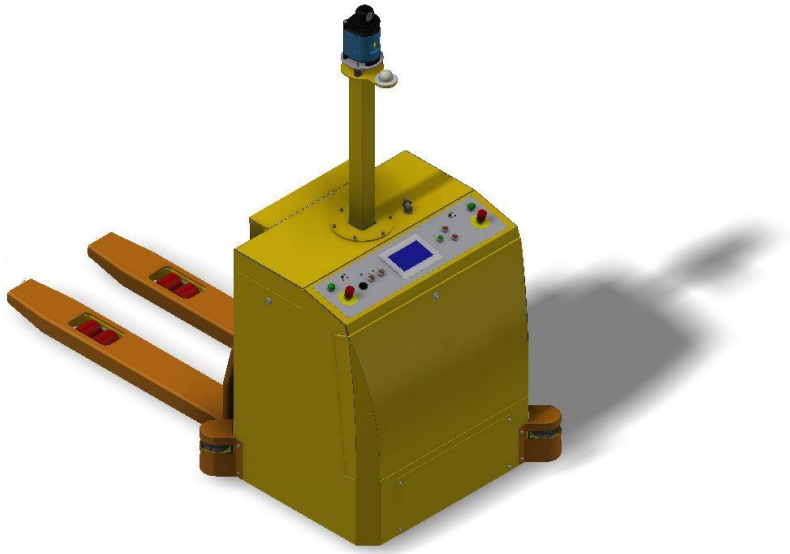

Technical specifications:

Type	L	B	H1	H2	H3	X
TPM l500	930	900	2025	1050	88	1200
TPM l1000	930	900	2025	1050	88	1200
TPM l1500	930	900	2025	1050	88	1200
TPM l2000	930	900	2025	1050	88	1200

Type	Traction capacity up to [kg]	Load capacity up to [kg]	Speed up to [m/s]	Lift [mm]	Operating Time (without loading) [h]	Power supply [V/Ah]	Safety
TPM l500	6000	2000	1,2	500	8	24/140	2 Laserscanner
TPM l1000	6000	2000	1,2	1000	8	24/140	2 Laserscanner
TPM l1500	6000	2000	1,2	1500	8	24/140	2 Laserscanner
TPM l2000	6000	2000	1,2	2000	8	24/140	2 Laserscanner

More technical details:

Power supply up to 500Ah possible

Tolerances:

Position accuracy:	fine positioning system	+/- 0,1mm (MCP80 on request)
	contour	+/-10mm
	laser scanner	+/- 15mm
Turning position:	+/- 0,1°	

TÜNKERS Ingenuity in series.
www.tuenkers.de ♦ Tel.: +49 2102 4517-0
SINOVA