Underbody Clamp

for postioning and clamping, with lock

KNL 40 UZ

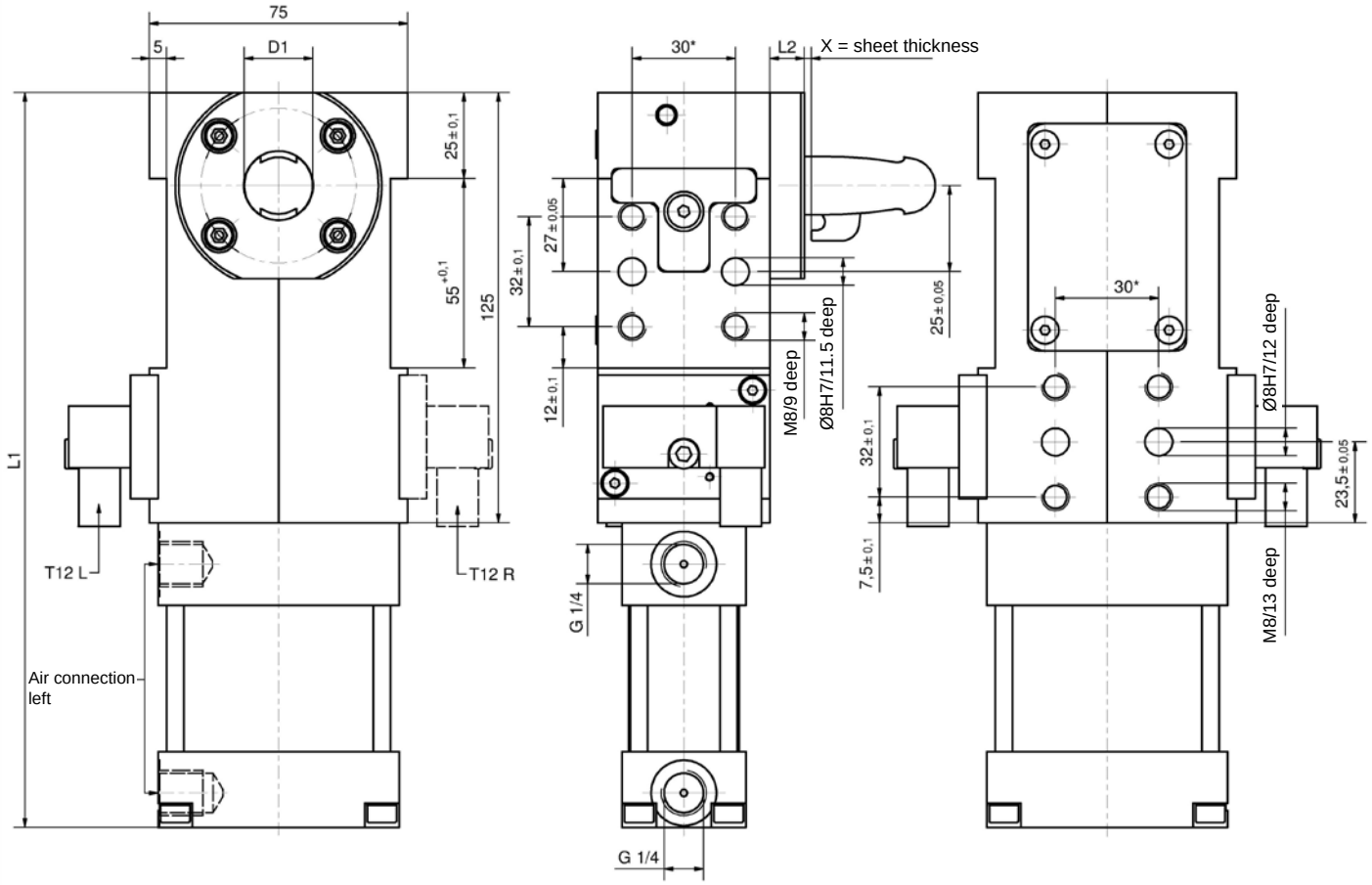

Hook positions

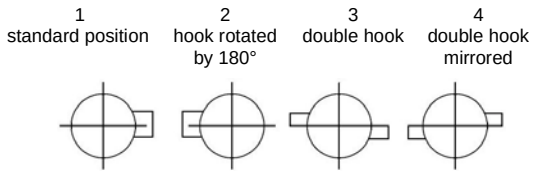

Pin forms

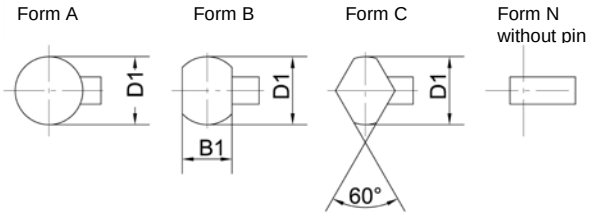

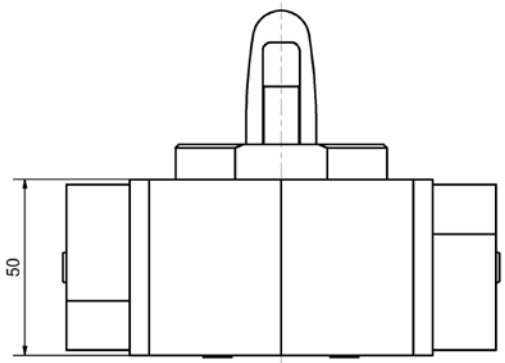

Example for request:

KNL 40 UZ 1A30_45 LL T12R X=4,2

KNL 40 UZ:	Type
1:	Hook position
A:	Pin form
30:	Pin diameter „D1“
45:	Height L2
LL:	Air connection left (LR = right)
T12R:	Sensing system right (T12L = left)
X=4,2	sheet thickness „X“

Ordering example Tünkers sensing systems:

...T00	Without sensing system
...T12L/R	Inductive sensor 24 V, 1 output with integrated LEDs

Please send your request example to our design office.

After checking your request you will receive an individual article number for the requested Underbody Clamp.

Actual, transferable force (**) depends on pin diameter and geometry of the hook.

Attention!

External throttle check valves must be provided on assembly. They are not included in the scope of delivery!

* Tolerance for dowel holes ± 0.02, for threaded holes ± 0.1.

Medium: Air, max. 6 bar, operation permitted with oil-free air.

Type	Holding force** at 5 bar max.	Clamping force at 5 bar	Weight ~ (kg)	L1	D1 Pin	L2 Height	X Sheet thickness
KNL 40 UZ	2500 N	2500 N		213.5			

TÜNKERS Erfindergeist serienmäßig.
www.tuenkers.de ♦ Tel.: +49 2102 4517-0