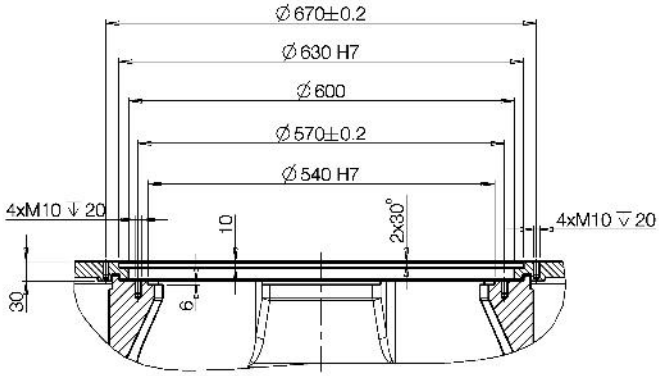
∅670±0.2
∅630 H7
∅600
∅570±0.2
∅540 H7
4xM10 ↓ 20
10
2x30°
4xM10 ↧ 20
30
6

A-A

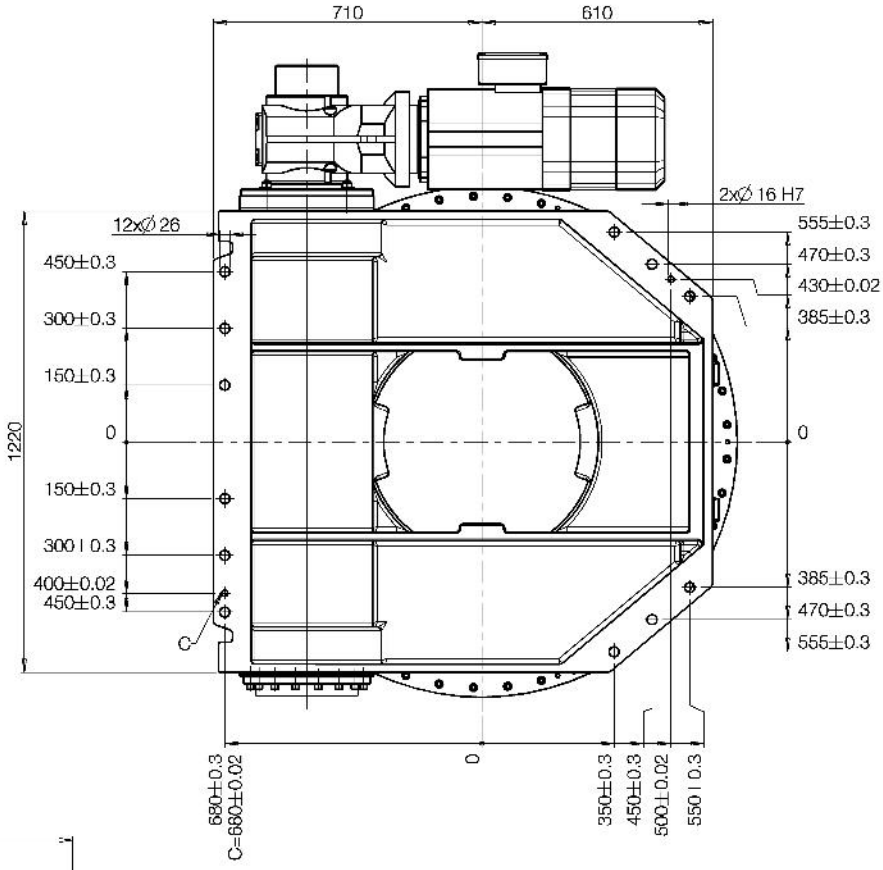
710
610
2x∅ 16 H7
12x∅ 26
555±0.3
470±0.3
430±0.02
385±0.3
450±0.3
300±0.3
150±0.3
0
1220
150±0.3
300±0.3
400±0.02
450±0.3
C
385±0.3
470±0.3
555±0.3
680±0.3
C=680±0.02
0
350±0.3
450±0.3
500±0.02
550±0.3

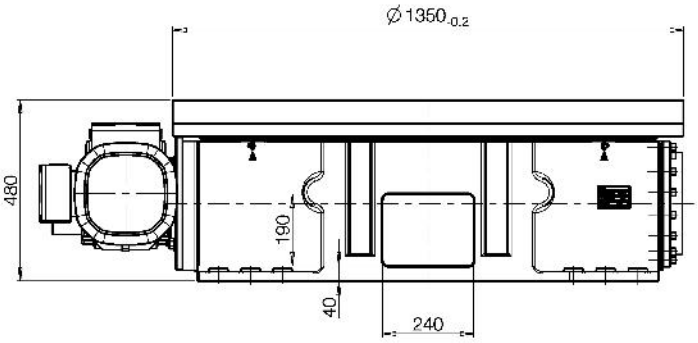
∅1350-0.2
480
190
40
240

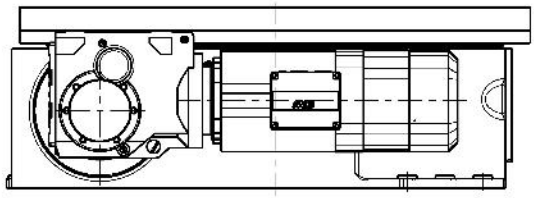

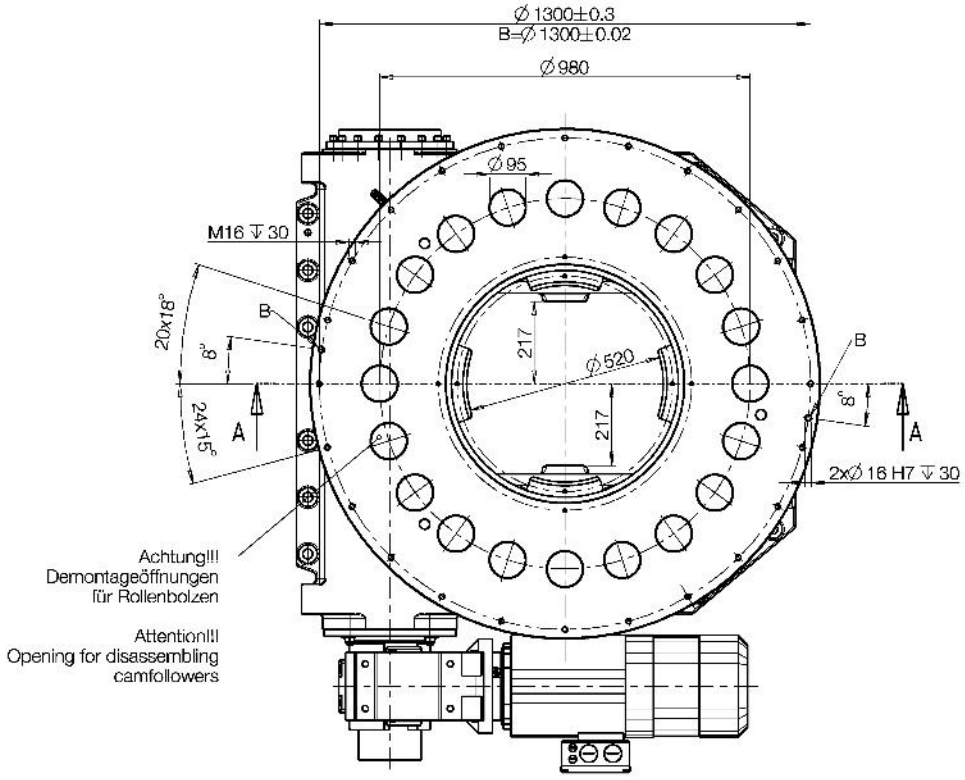
∅1300±0.3
B=∅1300±0.02
∅980
∅95
M16 ↧ 30
20x18°
B
8°
24x15°
A
217
∅520
217
B
8°
A
2x∅ 16 H7 ↧ 30
Achtung!!!
Demontageöffnungen
für Rollenbolzen
Attention!!!
Opening for disassembling
camfollowers