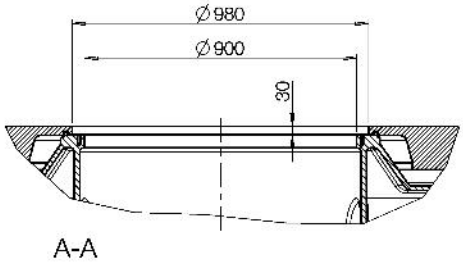
∅980
∅900
30
A-A

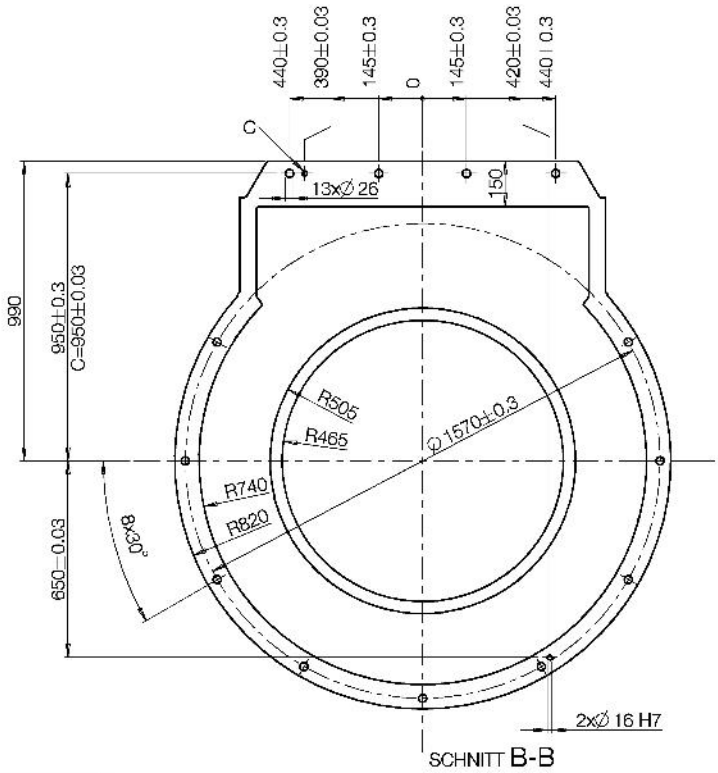
440±0.3
390±0.03
145±0.3
0
145±0.3
420±0.03
440±0.3
C
13x∅26
150
990
950±0.3
C=950±0.03
R505
R465
∅1570±0.3
R740
R820
8x30°
650−0.03
2x∅16 H7
SCHNITT B-B

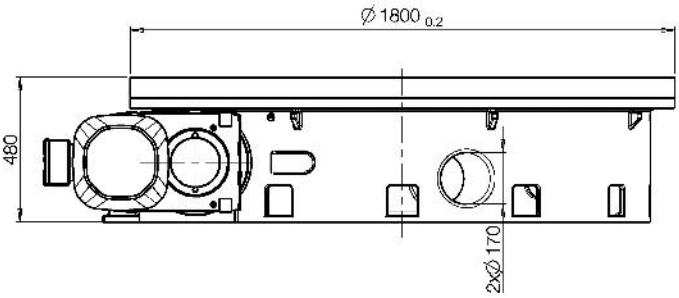
∅1800 0.2
480
2x∅170

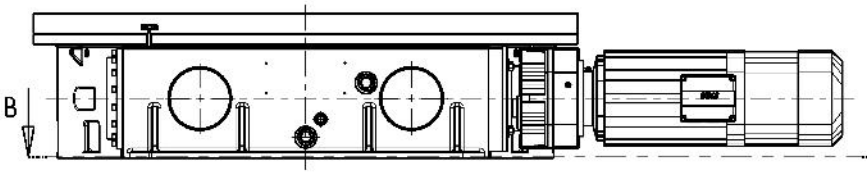
B

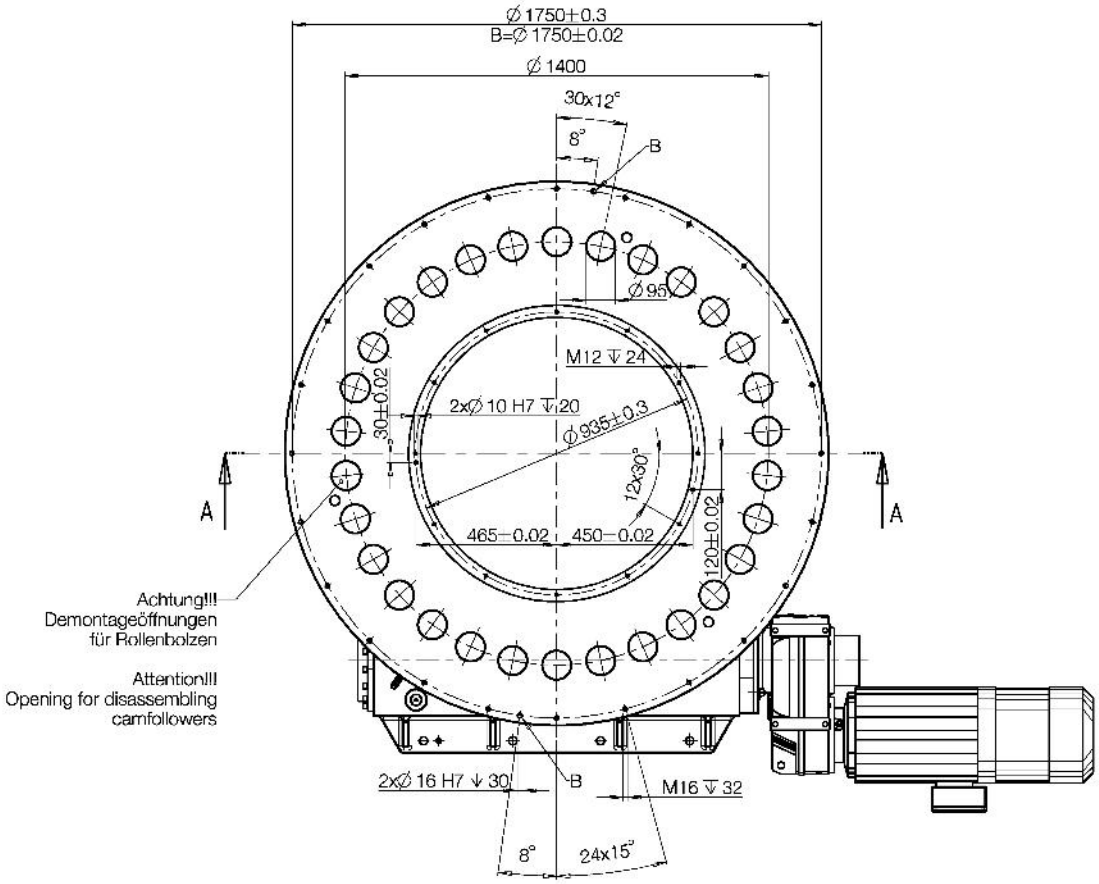
∅1750±0.3
B=∅1750±0.02
∅1400
30x12°
8°
B
∅95
M12 ↧24
2x∅10 H7 ↧20
30±0.02
∅935±0.3
12x30°
A
A
465−0.02
450−0.02
120±0.02
Achtung!!!
Demontageöffnungen
für Rollenbolzen
Attention!!!
Opening for disassembling
camfollowers
2x∅16 H7 ↓30
B
M16 ↧32
8°
24x15°